NATIONAL UNIVERSITY OF SCIENCE AND TECHNOLOGY

FACULTY OF INDUSTRIAL TECHNOLOGY

INDUSTRIAL AND MANUFACTURING ENGINEERING DEPARTMENT

COMPUTER AIDED DESIGN/COMPUTER AIDED MANUFACURING (CAD/CAM)

TIE 5111

END OF SEMESTER 1 EXAMINATIONS JULY 2013 Duration: 3 Hours

INSTRUCTIONS and INFORMATION TO CANDIDATE
Answer any FOUR questions out of SIX.
All Questions carry equal marks (25)

QUESTION ONE

(a) Briefly explain the four main hardware, of CAD/CAM equipment, networking arrangements possible for designing and manufacturing systems. **[8]**

(b) Describe the steps of the design process according to the Ohsuga model. Show, on the diagram, all the stages and indicate the input and outputs for each stage. **[17]**

QUESTION TWO

(a) Computer Aided Design provides the designer with a rich variety of techniques for the definition of Geometric entities. Describe with the aid of illustrative sketches the methods available for the definition (construction) of:

(i) point **[5]**

(ii) line **[5]**

(iii) arc **[5]**

(iv) surface representation **[5]**

(b) Identify and explain any five solid modelling primitives that are found on the AutoCAD modelling platform that you had used. **[5]**

QUESTION THREE

(a) What is geometric modeling? **[3]**

(b) Name and explain the main categories of solid modeling approaches.

(c) Create the CSG models of the two solids represented in Figure QU3, below. **[18]**

(d) What is the height of the binary tree in each case? **[4]**

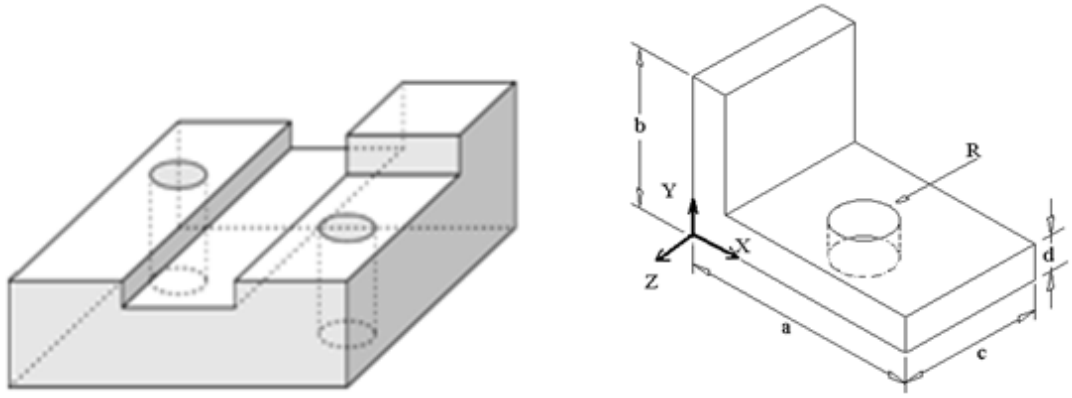

(i) (ii)

Figure QU3

QUESTION FOUR

(a) State the two main types of Euler Operators used in the development and manipulation of solid CAD Models like a Polyhedron. **[3]**

(b) Once a polyhedron model is available a CAD modeller may edit it into many other topologically valid solid models by the finite process of adding or deleting vertices, edges and faces to create a new polyhedron using the Euler Mantyla operators, which form a complete set of modelling primitives for manifold solids. Complete the Table TQ4 below by entering the relevant Euler Operators and the corresponding parameter entries where required. **[11]**

Table TQ4 Euler Operator and Parameters

Operator Name	**Meaning**	**V**	**E**	**F**	**L**	**S**	**G**
MSFV							
MEV	Make and Edge and a Vertex						
MFV							
MFE							
MSG							
MEKL							
KEV		-1	-1				
KFE							
KSFV							
KSG							
KEML							

Q4b) (i) Given the Inverse Euler Matrix (M^{-1}) below determine the Euler coordinates for the feature shown in Figure QU4. **[9]**

Given:

$$M^{-1} = \frac{1}{12}\begin{bmatrix} 9 & -5 & 2 & -2 & 3 & 1 \\ 3 & 5 & -2 & 2 & -3 & -1 \\ -3 & 7 & 2 & -2 & 3 & 1 \\ -6 & 2 & 4 & 8 & -6 & 2 \\ 3 & 5 & -2 & 2 & 9 & -1 \\ -6 & -2 & 8 & 4 & -6 & -2 \end{bmatrix}$$

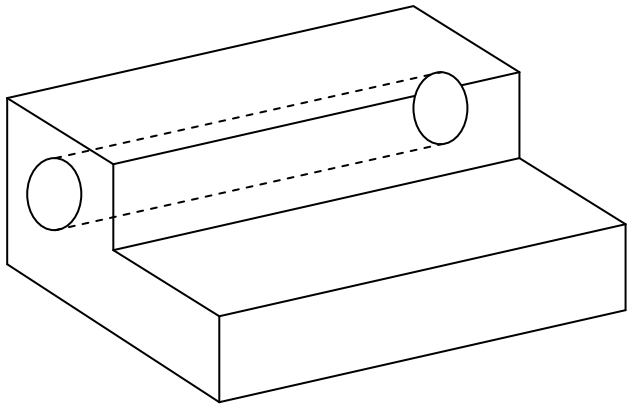

Figure QU4

(ii) Briefly explain how the Euler coordinates determination can be of significance in commercial draughting packages. **[2]**

QUESTION FIVE

(a) Explain the concept of boundary representation in modelling. **[3]**
(b) Generate the boundary representation of the solid shown in Figure QU5 below. **[12]**

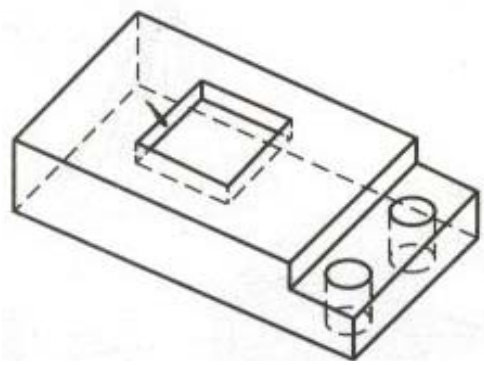

Figure QU5

(c) Briefly discuss two CAD/CAM data exchange standards and state their benefits. **[4]**

(d) Describe the following modelling techniques, using diagrams as appropriate:

i) pure primitive instancing **[2]**
ii) cell decomposition **[2]**
iii) spatial occupancy enumeration **[2]**

QUESTION SIX

(a) A point P (100, 100, 200) is to be translated by 50 units in X-direction, 60 units in they-direction and 40 units in the Z-direction. It was then given a rotation of 10 degrees about the x-axis, 15 degree about the y-axis and 15 degrees about the Z-axis. Find the transformation matrix and co-ordinates of the final position of the point. **[6]**

(b) Given four control points A(4,8), B(7, 9), C(8, 1), and D(10, 4) for a Bezier curve

$$\overline{p} = \overline{p}(u) = p_0(1 - 3u + 3u^2 - u^3) + \overline{p}_1(3u - 6u^2 + 3u^3) + \overline{p}_2(3u^2 - 3u^3) + \overline{p}_3(u^3).$$

Compute the gradients at start, mid and end point of the curve. **[6]**

(c) Explain briefly when AutoLISP programming may be the best relevant CAD Models genetating design domain in an engineering and manufacturing environment. **[4]**

(d) Write an AutoLISP code for auto-drawing the profile defined on Figure QU6, below, upon the entry of a variable dimension and picking up a start point by the operator. Also the program output should include the area represented (covered) by the outline drawn. **[9]**

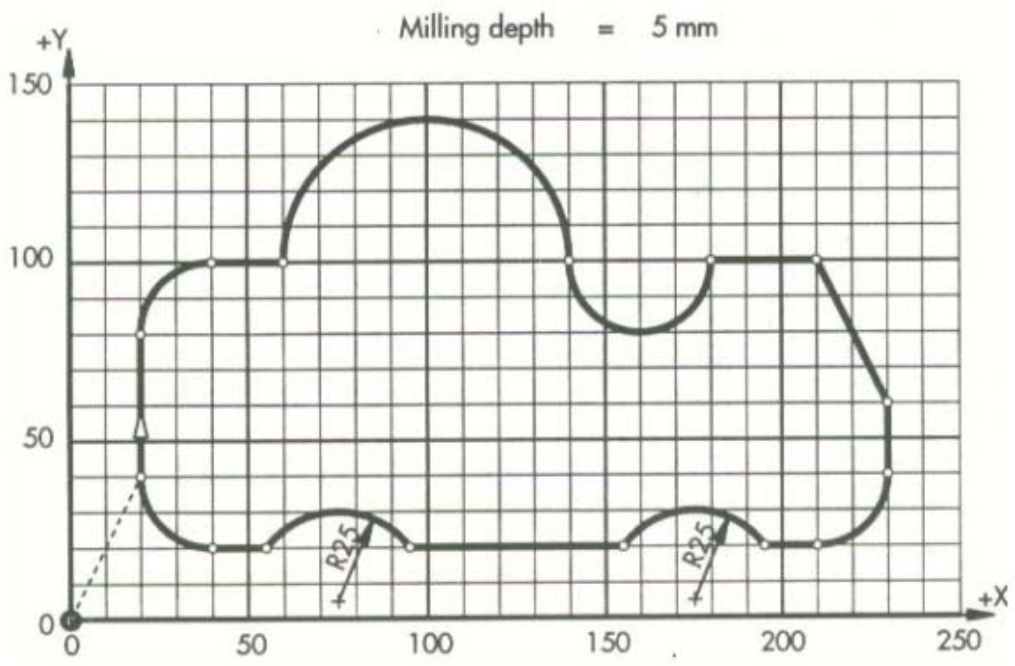

Figure QU6

End of Examination